ENGINEERING RESEARCH JOURNAL (ERJ)

Vol. 1, No. 41 July. 2019, pp. 70-73

Journal Homepage: www.feng.bu.edu.eg

Effect of Friction Stir Welding Process Parameters on Surface Roughness of AA6063 Al Alloy Plates

S. A. Abdallah , F.A. Alotaibi

Mechanical Engineering Department, Faculty of Engineering at Shoubra, Benha University

Abstract. In this research, Friction stir welding (FSW) of AA6063 with cold rolled using three tool rotational speeds, and three welding transverse speeds were done to investigate the behavior of surface roughness of weld line. Surface roughness increase with increase tool rotational speed at different welding transverse speeds. ANAOVA analysis was obtained on the results of surface roughness to analyze the results. The optimum value of surface roughness with FSW condition of 590 RPM and 16 mm/min.

Keywords: Friction stir welding, Aluminum Alloys, Surface Roughness, ANAOVA.

1. INTRODUCTION

Friction stir welding was invented by The Welding Institute (TWI) in December 1991. TWI filed successfully for patents in Europe [1]. In FSW, a cylindrical, shouldered tool with a profiled probe is rotated and slowly plunged into the weld joint between two pieces of sheet or plate material that are to be welded together. The parts must be clamped onto a backing bar in a manner that prevents the abutting joint faces from being forced apart or in any other way moved out of position. Frictional heat is generated between the wear-resistant welding tool and the material of the workpieces. This heat causes the workpieces to soften without reaching the melting point and allows the tool to traverse along the weld line. The surface roughness of the surface weld is the most challenge in FSW of aluminum alloys and few of studies discuss the effect of FSW parameters on surface roughness. In a study of FSW of AA6061, the results indicated that the reduction in surface roughness of the workpieces plays an important role in controlling the quality of the weld [2]. FSW of AA1200 was studied to knowing the effects of various variables like speed, transverse feed rate and shoulder diameter of the tool has been carried out on surface roughness and the average surface roughness was 2.94 µm [3]. The combination of wrought aluminum-magnesium-silicon alloy confirming to aluminum AA6061 FSW has discussed the effect of tool rotational speed on surface roughness, Surface roughness values decrease with the increase in speed of the tool and also there exists an optimum speed to have the good surface finish [4]. Nine welded joints of 6061 aluminum alloy were made on friction stir welding set up with the L9 orthogonal array of Taguchi s methodology to determine the optimum surface roughness value and are observed at spindle rotational speed 1100 rpm, transverse feed 42 mm/min, tilt angle 0 degrees [5]. Friction stir welded of AA2017 aluminum alloy using Taguchi L8 orthogonal design of experiments and response surface methodology was done and founded that an increase in the rotation speed decreases the surface roughness while any increase in the traverse speed or the tool diameter shoulder increases it [6].

In this study, the surface roughness (R_a) of the FSW joints of AA6063 was studied using different tool rotational speeds, and different welding transvers speeds. ANAOVE analysis has been done to analyze the results of surface roughness (R_a).

2. EXPERIMENTAL PROCEDURES

2.1. Materials

The materials used in this study were AA6063 wrought aluminum alloys with cold rolled. The chemical compositions of AA6063 is listed in Table 1. The aluminum plates have dimensions of 40 cm length, 8 cm width and 1.2 cm thickness.

Table 1. Chemical composition of 6063 aluminum alloy (wt.-%).

Alloy	Si	Fe	Mg	Mn	Cu	Al
AA6063	0.35	0.36	0.36	0.01	0.01	Bal.

2.2 DESIGN OF EXPERMENT (DOE)

In this work, welding parameters are tool rotational speed in RPM and welding transverse speed in mm/min. welding conditions sorted based on the factorial design (fall factorial) is performed by utilizing the Minitab 18 to evaluate the effect factors of the friction stir welding (FSW) and main effects using all experimental tests.

2.3 Tools Geometry and FSW Operation

The FSW process of the AA6063 explains in Fig. 1. The FSW was carried out on conventional milling machine and using four different tool rotational speeds, typically, 470, 590,740, and 900 RPM, and three different welding transverse speeds, typically, 16, 31.5, and 50 mm/min. The fully experimental method was used to sort the conditions of FSW of AA6063 conditions. The plates were put side by side to make butt welding joint. The depth of shoulder inside the plate was constant as 1 mm. The tool having taper pin profile and the shoulder have flat surface was used to weld the AA6063. Fig. 2 shows a schematics illustration of the tool. The tool was made from K110 tool steel. The tool has tapered pin profile with 8 mm diameter with tapered angle of 5.3° with the length of 10.8 mm. The tools have a shoulder diameter of 40 mm with flat surface. The tilt angle was constant at 0°.

Fig. 1 Friction stir welding process

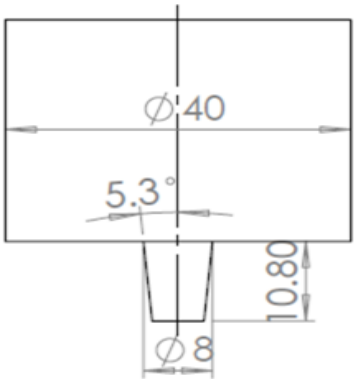

Fig. 2 Schematic illustration of the tool used in the present study dimensions in mm

2.4. Surface Roughness (Ra) Measurements

After FSW, the welded joints were cut from start, end, and center of welding line to measure the surface roughness of the top surface of welding line. Minutolo Surftest SJ-310 portable surface roughness tester was used to measure the surface roughness. Fig. 3 shows the measurement of the surface roughness of FSW of AA6063.

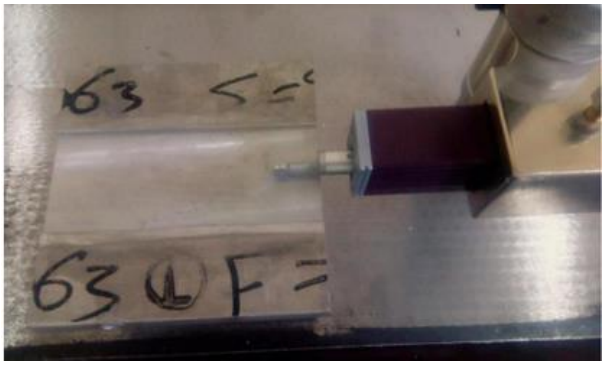

Fig. 3. Measurement of the surface roughness of FSW of AA6063.

3. RESULTS AND DISCUSSION

Table 2 shows the results of surface roughness (R_a) of FSW of AA6063. It's noted that the surface roughness (R_a) in center of is better than the surface roughness (R_a) in the start and end location. Fig. 4 shows the effect of tool rotational speed on surface roughness (R_a). In all welding transverse speeds, the surface roughness (R_a) increase with increase tool rotational speed.

4. ANALYSIS OF VARIANCE (ANOVA)

ANOVA is a statistical analysis method for data analysis. It includes design parameters that affect significantly output characteristics. The results of ANOVA indicate that the considered process parameters are highly significant factors affecting the surfaces roughness of FSW joints in the order of rotational speed, and welding transverse speed. Table. 3 shows the (ANOVA) results for surfaces roughness. The

tool rotational speed (59.16 %) is more contribution than welding transverse speed (23.94 %). P-value for tool rotational speed (0.007) is smallest value comparing by welding transverse speed (0.030).

Table 2. The Results of Surface Roughness (R_a) of FSW of AA6063

Tool Rotational speed(RPM)	Welding transverse speed (MM/Min)	Surface Roughness µm		
		Location	Ra	Average Ra
470	16	Start	12.595	7.142
		Center	6.448	
		End	2.382	
590	16	Start	0.593	0.522
		Center	0.334	
		End	0.639	
740	16	Start	0.892	0.572
		Center	0.458	
		End	0.365	
900	16	Start	0.669	1.094
		Center	0.985	
		End	1.627	
470	31.5	Start	0.618	0.677
		Center	0.559	
		End	0.854	
590	31.5	Start	0.678	0.746
		Center	0.53	
		End	1.031	
740	31.5	Start	1.286	1.002
		Center	0.925	
		End	0.794	
900	31.5	Start	1.683	1.617
		Center	1.945	
		End	1.224	
470	50	Start	1.082	0.762
		Center	0.583	
		End	0.622	
590	50	Start	1.063	0.85
		Center	0.515	
		End	0.971	
740	50	Start	0.95	1.086
		Center	0.84	
		End	1.469	
900	50	Start	1.493	1.143
		Center	1.164	
		End	0.772	

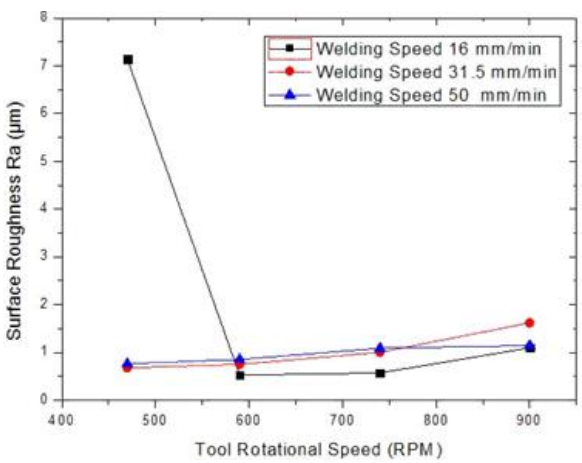

Fig. 4. The Effect of Tool Rotational Speed on Surface Roughness (R_a).

Table 4. ANOVA table for Tensile Shear Load.

Source	DF	Contribution (P, %)	Adj SS	Adj MS	F-Value	P-Value
Tool Rotational Speed (rpm)	3	59.16%	0.7879	0.26265	11.5	0.007
welding transverse speed (mm/min)	2	23.94%	0.3045	0.15223	6.66	0.030
Error	6	16.9 %	0.1371	0.02284		
Total	11	100 %				

In ANOVA method, sum of square (SS), mean square (MS) & F-test values are calculated for deciding significant factors which affecting the process & also percentage contribution contributed by parameters are calculated. Where: DF = Degrees of freedom, SS = sum of squares, Adj SS = Adjusted sum of square, Adj MS = Adjusted mean square, P-value = probability value, and F-value = variation between sample means [7].

4.1 MAIN EFFECTS PLOTS FOR MEANS

As mentioned above from Table 2, it was seen the smallest surface roughness was (0.522 µm) at the best welding process parameters of tool rotational speed of (590 PRM), and welding transverse speed of (16 mm/min). Fig. 5 shows the main effects plot for means of surface roughness for friction stir welding joints AA6063. It was seen that the surface roughness reaches a minimum value at the optimum value of process parameters of tool rotational speed of 590 RPM) and welding transverse speed of (16 mm/min).

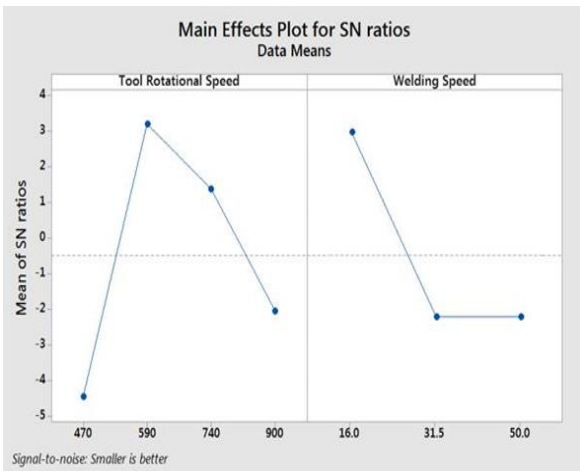

Fig. 5. The Main Effects Plot for Means of Surface Roughness for FSW Joints AA6063

5. CONCLUSIONS

Based on the results achieved from the present study, the following conclusions can be derived:

1- Friction stir welding can be used successfully to weld AA6063 in butt joint fabrication.
2- At different welding transverse speeds, he surface roughness (R_a) increase with increase tool rotational speed.
3- Tool rotational speed in more significant than welding transverse speed on surface roughness.
4- The optimum surface roughness value in FSW of AA6063 at tool rotational speed of 590 RPM, and welding transverse speed of 16 mm/min.

6. REFRENCE

[1]. Mishra R. S., Ma Z. Y., "Friction Stir Welding and Processing", Mater. Sci. Eng., 2007, Pp. 1–47.
[2]. Hasan I. Dawood, Kahtan S. Mohammed, Azmi Rahmat, M.B. Uday, "The Influence Of The Surface Roughness On The Microstructures And Mechanical Properties Of 6061 Aluminium Alloy Using Friction Stir Welding", Surface & Coatings Technology, 2015
[3]. Sandhya Dixit, "Factorial Design in Friction Stir Welding", YMCAUST International Journal of Research July 2015 Vol.3 (II).
[4]. Ashok Babu.J, And G.Gopala Krishna, "Experimental Investigation Of Friction Stir Welding Of Aluminum Aa6061 Alloy Joints Testing", IOSR Journal Of Mechanical And Civil Engineering (IOSR-JMCE) Volume 12, Issue 6 Ver.III (Nov. - Dec. 2015), PP 01-05.
[5]. Lingam Satyavinod, R Harikishore, "Parametric Optimization for Friction Stir Welding Of Al6061 Alloy Using Taguchi Technique", International Journal of Science and Research (IJSR), Volume 6 Issue 1, January 2017.
[6]. Khaled Boulahem1, Sahbi Ben Salem, And Jamel Bessrour, "Surface Roughness Model And Parametric Welding Optimization In Friction Stir Welded AA2017 Using Taguchi Method And Response Surface Methodology" , Design And Modeling Of Mechanical Systems – II Proceedings Of The Sixth Conference On Design And Modeling Of Mechanical Systems, CMSM 2015 March 23–25, Hammamet, Tunisia, Pp 83.
[7]. Minitab 17 Program Guides and Help (2014).